TOLERANCE UNLESS OTHERWISE SPECIFIED ± < 5 ± 1/2° DIAMETERS ±	ROUGHNESS – 32 CLA DIAMETERS TO BE CONCENTRIC WITHIN– HOLD NORMAL AND PARALLEL FACES WITHIN–	REMOVE ALL BURRS AND BREAK ALL SHARP EDGES DIMENSIONS ARE BEFORE PLATING OR FINISH	DRAWN IN ACCORDANCE WITH BS. 308. THIRD ANGLE PROJECTION. DO NOT SCALE. DIMENSIONS ARE IN MILLIMETRES.	DRAWING No. 76-9430/439088R	ISS. D

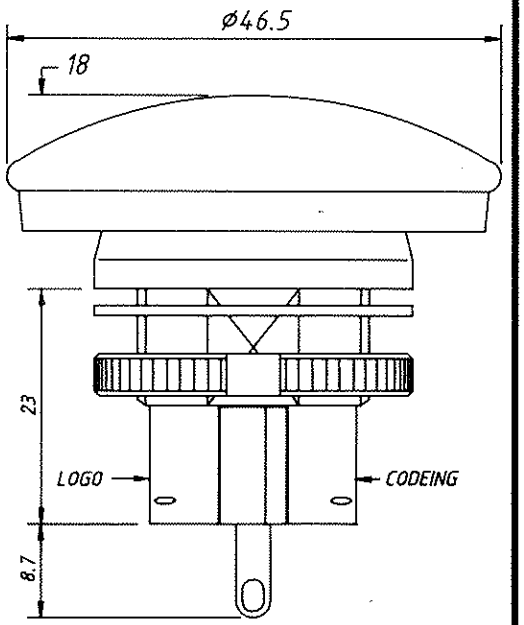

ENVIRONMENTAL:-

TEMPERATURE RANGE:- -40 +135°C

INGRESS PROTECTION:- IP 67

SHOCK:- 50 G

IMPACT:- 20 JOULES

DESIGNED IN ACORDANCE WITH BRITISH COAL (N.C.B) NON-SPARK METALS SPECIFICATION 481/1965.

MECHANICAL:-

DIMENSIONS:-

THREAD DIAMETER (NOM)	22
BODY ACROSS FLATS (NOM)	20
PANEL THICKNESS (MAX)	6
PITCHING (MIN)	30.2
INSTALATION TORQUE	2.5 Nm

CONSTRUCTION:-

"ALL METAL" EXTERNAL PARTS
"STRIPABLE" SWITCHING ELEMENT CAN BE REPLACED.

FINISH:-

BODY:- BLACK P.T.F.E.

BUTTON:- RED P.T.F.E.

LIFE:- 10,000.000 CYCLES.

ELECTRICAL:-

CONFIGURATION:- SPDT-DB.

CURRENT:-

5 AMPS @ 250 Va.c., 10 AMPS WITH LIFE & MAX, TEMP DERATED TO 50,000 & 70°C.

LIFE:- 100,000 CYCLES

DIELECTRIC STRENGTH:- 1000 Vrms

INSULATION RESISTANCE:- 1 G Ω

CONTACT RESISTANCE:- 25 m Ω (INITIAL)

ISS.	CHANGE NOTE No.	DATE	APPR.	ISS.	CHANGE NOTE No.	DATE	APPR.
A	ECN 85531	23.6.93	MD				
D	ECN 86307	30-4-97	JPL				

ITW Switches

Licon Switches, Chicago Switch, RC/UID Switches

© 1992
The Copyright in this drawing and in the articles shown belongs to ITW Switches and no reproduction in whole or in part of the drawing or the articles shown may be made without prior written permission.

FINISH	MATERIAL & SPEC.
(AS ABOVE)	(SEE BILL OF MATERIAL)
HEAT TREAT	

DRAWN	CHKD.	APPR.	SCALE	DATE	TITLE	DRAWING No.	ISS.
MD MD	PS	SB	2:1	23.6.93	RAISED PUSH BUTTON SWITCH	76-9430/439088R	D