DRAWING No	16–439088	DO NOT SCALE	DIMENSIONS IN MILLIMETRES THIRD ANGLE PROJECTION	CAD SYSTEM: . CAD FILE NAME: .

CHARACTERISTICS

PRETRAVEL	——	1.3 MAX
OVERTRAVEL	——	0.3 MIN
MOVEMENT DIFF	——	0.30–0.75
OPERATING FORCE	——	0.8/2.3N (82/235g)
RELEASE FORCE	——	0.5N MIN (51g)

ELECTRICAL RATING

250 Vac 6A RESISTIVE – 100 000 CYCLES @ 20°C ±5°C

250 Vac 10A RESISTIVE – 50 000 CYCLES @ 70°C

28 Vdc 5A RESISTIVE

28 Vdc 2.75A INDUCTIVE (L/R 0.026)

CONTACT ARRANGEMENT – SPDT–DB FORM Z.

AMBIENT TEMPERATURE – RANGE –55°C TO +135°C.

CODING DETAILS ON SWITCH

16–439088 YYWW

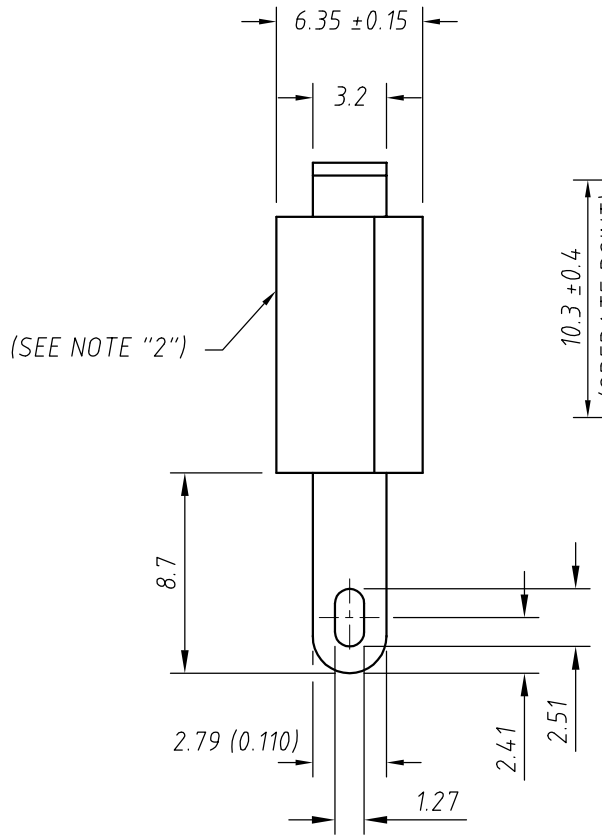

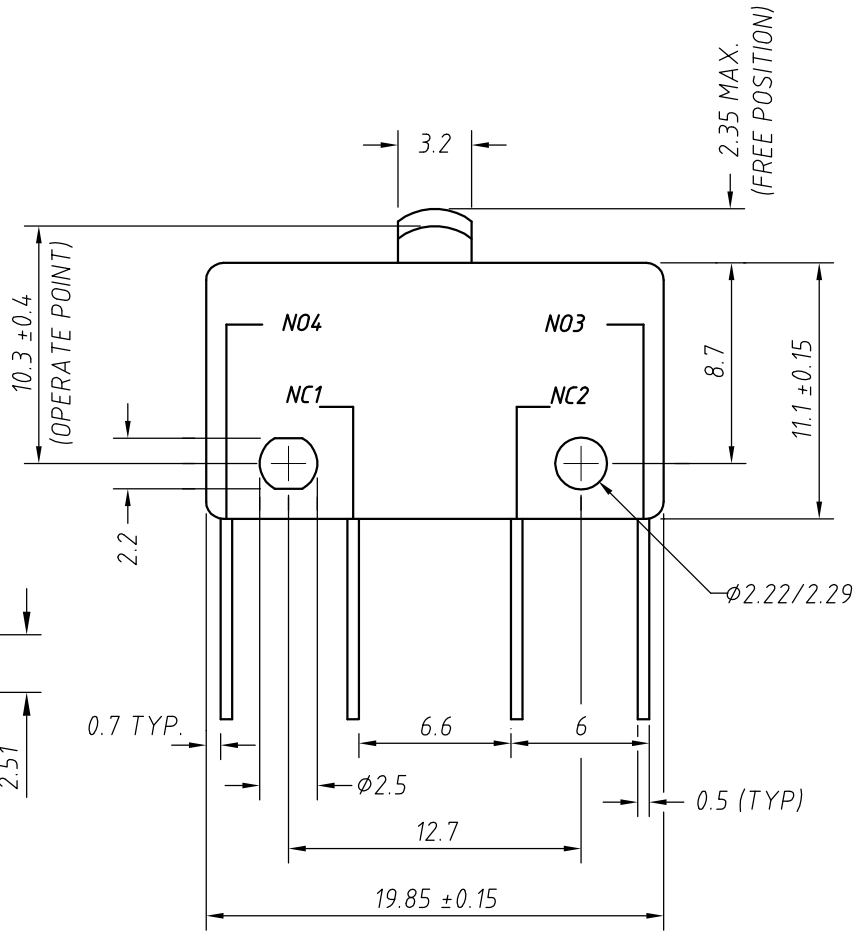

NOTES:–

1. THERMOPLASTIC SNAP–TOGETHER CASE & COVER.
2. SWITCH MARKING ON THIS SIDE TO BE PART NUMBER FOLLOWED BY 4 DIGIT DATE CODE. (SEE CODING DETAILS).

ISS	ECN	SIGN	DATE	ISS	ECN	SIGN	DATE
E	87476	BV	25.6.04	·	·	·	·
·	·	·	·	·	·	·	·
·	·	·	·	·	·	·	·
·	·	·	·	·	·	·	·
·	·	·	·	·	·	·	·

NOTICE
ALL RIGHTS RESERVED: UNAUTHORISED USE, DISCLOSURE OR REPRODUCTION IN WHOLE OR IN PART IS STRICTLY PROHIBITED.
© 2004

ITW Switches
ITW Switchpanels
Norway Road
Hilsea
Portsmouth
Hants PO3 5HT
Tel: +44 (0)23 92 656200
Fax: +44 (0)23 92 666352
Internet: www.itwswitches.co.uk

STANDARD TOLERANCES
NO PLACE DEC. ±0.5
1 PLACE DEC. ±0.2
2 PLACE DEC. ±0.1
DIAMETERS ±0.05
ANGULAR ±0.5°
UNLESS OTHERWISE STATED

SCALE: 4:1

MATERIAL
.
.
.

FINISH
.
.

DRAWN	DATE	SIGN	DATE
BV	25.6.04	·	·

TITLE SWITCH SUB–MINIATURE

DRAWING No 16–439088 A3